SAS922 FHL-7 Thermostat for Floor Heating

SAS922FHL-7 system thermostat is a programmable controller used to control heating material in electric heating system.

SPECIFICATION:

Power source …… 100-240VAC50/60Hz

Maximum load electric current……16A/250VAC

Room temperature setting range……5℃ to 70℃

Floor temperature setting range……5℃ to 70℃

Accuracy…… 0.1℃

Working environment temperature……0℃ to 50℃

The storage temperature: ……-10℃ to 60℃

Dimensions……86mm X 86mm X 13mm

FEATURE:

- 4 inch large screen display
- Can control 16A high power heating facilities
- Permanent user setting retention during power loss
- Display temperature recalibrates
- Optional types of control for different heating application including room thermostat; floor thermostat or room thermostat with floor limitation
- Optional programming Period: 7 individual day programming
- Touch button

IMPORTANT SAFETY INFORMATION:

- Read all of the information in this manual before installing this thermostat.
- Always turn off power at the main power source by unscrewing fuse or switching circuit breaker to the off position before installing, removing, cleaning, or servicing this thermostat.
- Only a professional contractor should install this thermostat.
- All wiring must conform to local and national building and electrical codes and ordinances.
- Use this thermostat only as described in this manual.

INSTALL THE THERMOSTAT

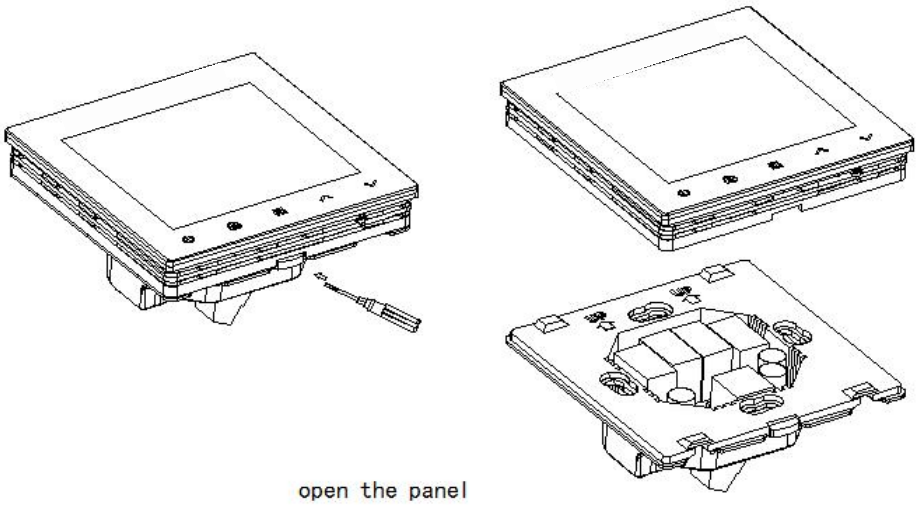

open the panel

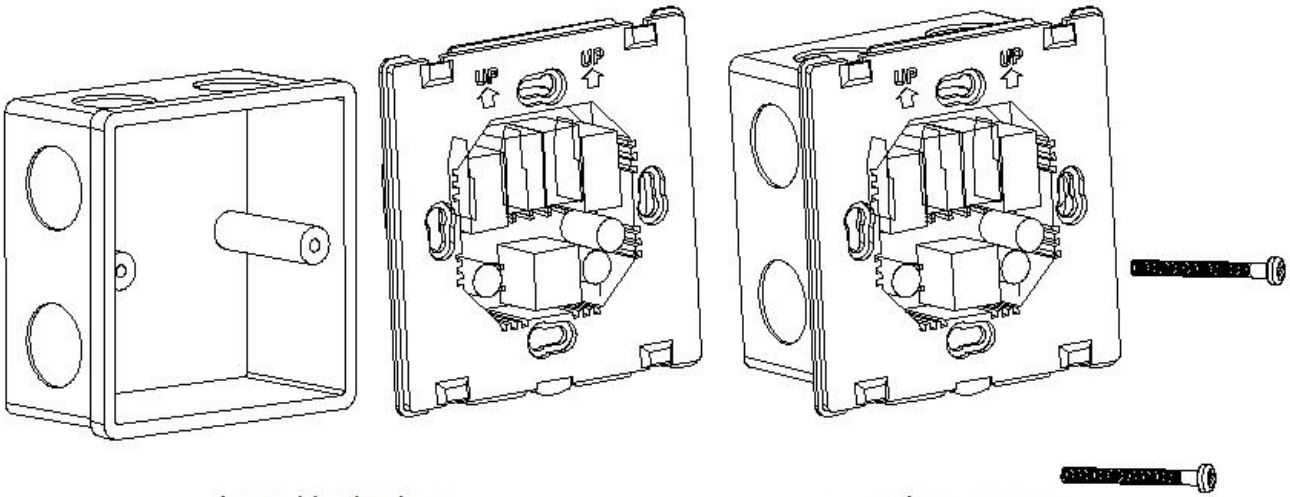

install the base

mounting screws

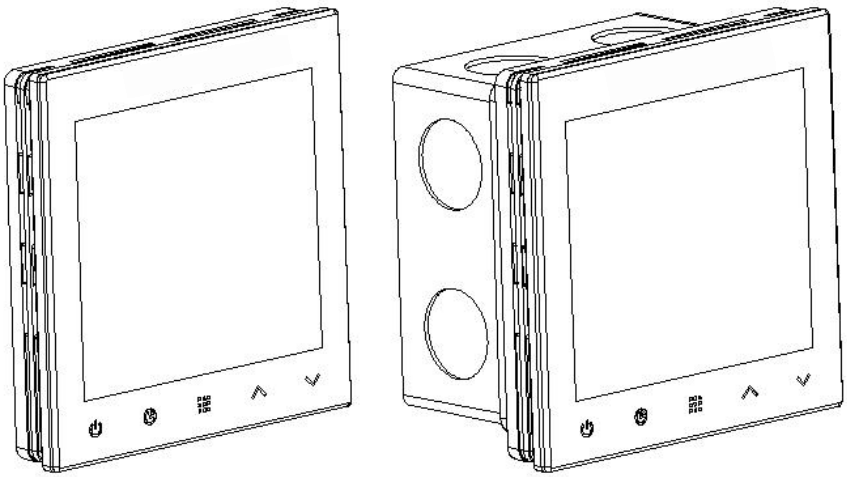

install the panel

Elementary diagram

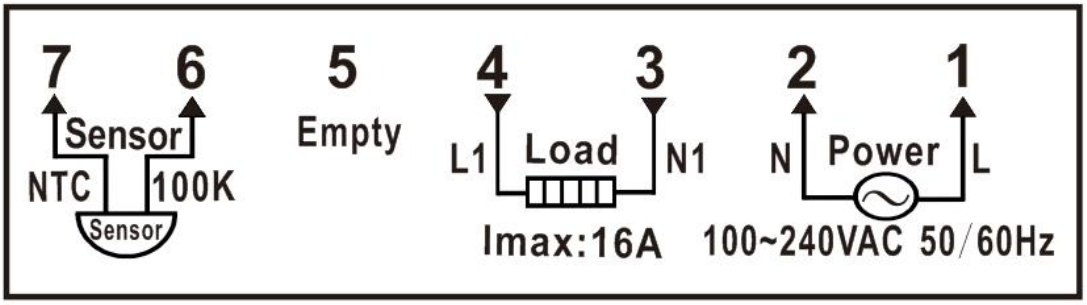

DISPLAY AND SWITCH DESCRIPTION

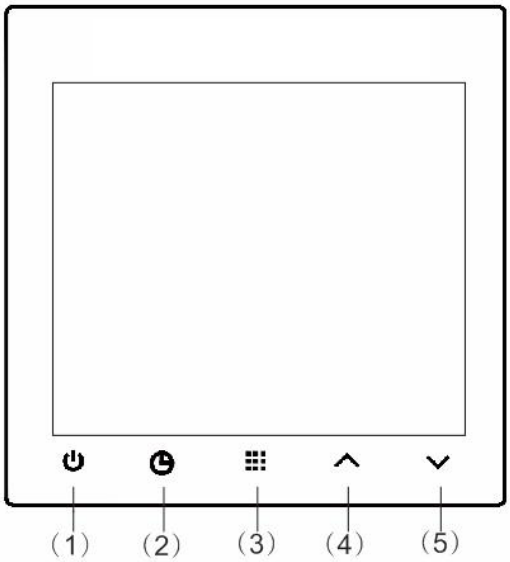

(1) Power/OK button : Press shortly to turn on/off the thermostat.

(2) Time button: When thermostat turn on press time button shortly to set time .Under the condition of short hours according to the time set in order to enter the minutes, week days set by +/-

(3) Menu button: To set another implicit parameter, press implicit parameter long to restore factory setting ;when thermostat turn on, at programmable model press the button long to set programming, at programmable mode press shortly to set another program ,press program long reset parameter.

(4) Raise temperature setting

(5) Lower temperature setting

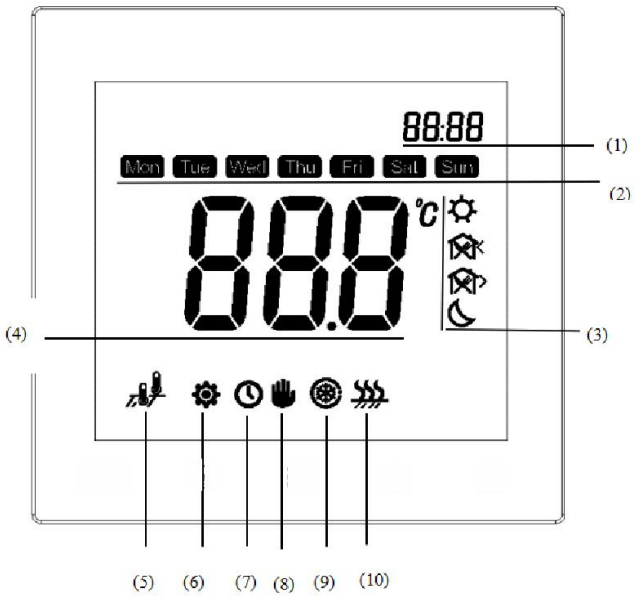

(1) Show setting temperature and time

(2) Weeks show mark

(3) Shows current programming period

(4) Temperature shows mark

(5) Sensor control mode:

: Pairs of dual-temperature control

: Single floor control

: Single room control

(6) Implicit parameter setting mark

(7) Shows when thermostat is in programmable operation mode

(8) Shows when thermostat is permanent hold mode

(7) +(8) temporary mode

(9) Shows when thermostat is in anti freezing mode

(10) Shows when thermostat start heating output

OPERATION

1. Configuration Menu

The configuration menu allows you to set certain thermostat operating characteristics to your system or personal requirements. When thermostat at off mode, Hold button for 5 seconds to enter the configuration menu. The display will show the first item in the configuration menu. Press button to shift to the next menu item. Use or to select. When press will exit menu setting and back thermostat off mode.

To exit the menu, press button. The thermostat will exit the configuration menu If no action within 20 seconds,.

Restore factory default setting: In the configuration menu, push button for 3 seconds. Display will show "D**EF**" blinking 3 times and return to Menu item 1 indicates all the configuration setting has reverted to factory default setting. The configuration menu chart summarizes the configuration options.

An explanation of each option is given below:

Item	Press buttons	Displayed (factory default)	Press ▲or ▼to select	Descriptions
1		CL (0.0)	-6.0 --- +6.0	Select temperature display adjustment higher or lower
2		AH (35℃)	20℃—70℃	Select maximum room setting temperature
3		AL (5℃)	5℃—20℃	Select minimum room setting temperature
4		FH (40℃)	20℃—70℃	Select maximum floor setting temperature
5		FL (5℃)	5℃—20℃	Select minimum floor setting temperature
6		SEN (AL)	AL/In/OU	Program option AL: Room temperature control is given priority to, the floor temperature controls the function of the protection (electric heating is adopted); In: only the room temperature control (water heating is adopted); OU: only the floor temperature control.
7		bL (3)	2/3	Backlight mode 2. When press button ,backlight is bright for 30 seconds 3. Backlight always bright.
8		PSI (0)	7/0	Program option 7: 7 days separately (Refer to table 1 and table 2); 0: Non program
9		ES (OF)	On/OF	Intelligent Recovery Option:

				OFF： Without intelligent function On: Activate intelligent function
10	⠿	An(OF)	On/OF	On: Active anti-freezing function OFF: Close anti-freezing function drive is used
11	⠿	Ld(H)	L/H/HH	HH: the load flow rate is 12-16 (A) H: the load flow is 8-11 (A) L : the load flow is 0-7 (A)
12	⠿	Ntc（H）	H/L	Sensor selection H: 100K Sensor L: 10K Sensor

1. Manual Operation

1) Set current day and time

Thermostat On

a) Turn on the thermostat , press button to enter the time setting.

b) Press button again, The display will only show minutes flashing

c) Press and hold either or until you reach the correct minutes

d) Press button once again. The display will show the hour flashing.

e) Press and hold either or until you reach the correct hour

f) Press button once again. The display will show the day of the week flashing.

g) Press and hold either or until you reach the correct day of week

Press button ⠿ once again or any keys are not pressed within 10 seconds, the thermostat will revert to program operation

2) Operation mode

a Running schedule mode(The factory default is Non programmable.)

Thermostat keep the temperature as setting temperature temporarily, when screen show

b) manual mode

Enter the implicit parameter setting state to set the programming mode to 0

Button to exit the parameter settings and back to off condition

Reopen, the screen will display thermostat device to enter the manual mode,

Press or in running schedule mode to immediately adjust the temperature. Press to save and exit.

3) Temporary hold mode

The thermostat will temporarily keep the room at the setting temperature, and will resume the program operation mode when entering the next program.

Programming operation mode, press ⌃ or ⌄ shortly enter the temporary hold mode, the screen display.

Press ⌃or ⌄ in running schedule mode to immediately adjust the temperature. Press ⏻ to save and exit.

4) Program setting

The thermostat can select the program setting only on programming.

When thermostat on , press ⠿ long to set program. If the program had been set OK before thermostat leave factory, press ⏻,if without any operation for 10s, thermostat will exit program setting automatic.

Enter the programming settings: press ⠿into the set program, press ⠿can select weeks, time, temperature, the screen flashes and show current selection position.

Press ⌃or ⌄ in running schedule mode to immediately adjust the temperature. Press ⏻ to save and exit.

Excel 1（7 days six period factory setting）

Heating mode		Morning	Outside	Afternoon	Outside	Back	Night
Monday-Sunday	Time	6:00	8:00	12:00	14:00	18：00	22：00
	Temperature	21℃	16.5℃	21℃	16.5℃	21℃	16.5℃

Alarm instructions

Err. display	Err. condition	**Result**
Err. 1	Room sensor not installed	Thermostat shuts down all heating output.
Err. 2	Floor sensor not installed	Thermostat shuts down all heating output.